Creative Commons Share-Share Alike 2.5 License
(c) 2007 John Chapman
www.response-box.com

LED Drive Resistor Values to be determined. Drive current is 20 mA

Connections for Standard DMX Cables:
RJ45-2 --> XLR5-1
RJ45-7 --> XLR5-2
RJ45-8 --> XLR5-3

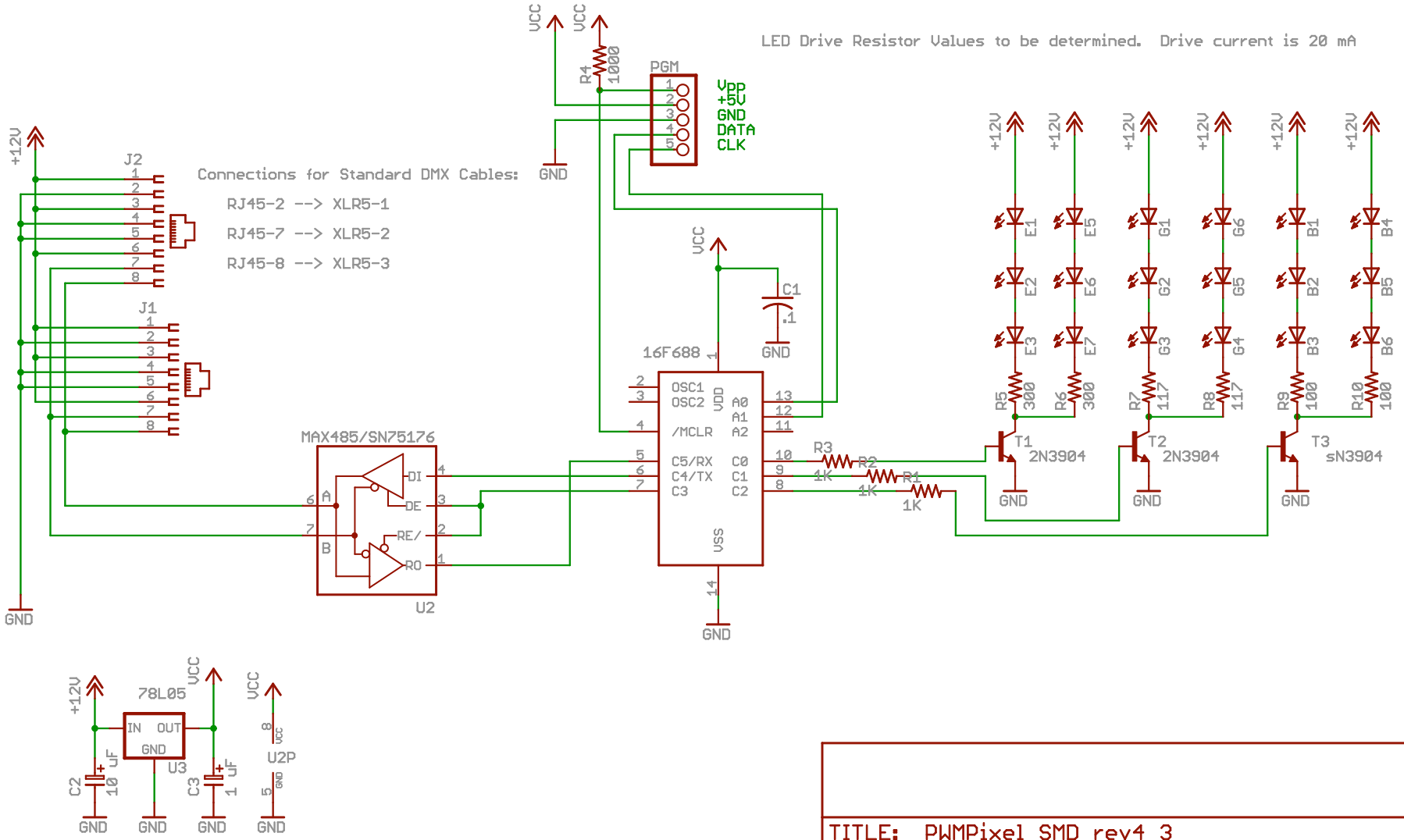

TITLE: PWMPixel_SMD_rev4_3	
Document Number:	REV:
Date: not saved!	Sheet: 1/1