Creative Commons Share-Share Alike 2.5 License

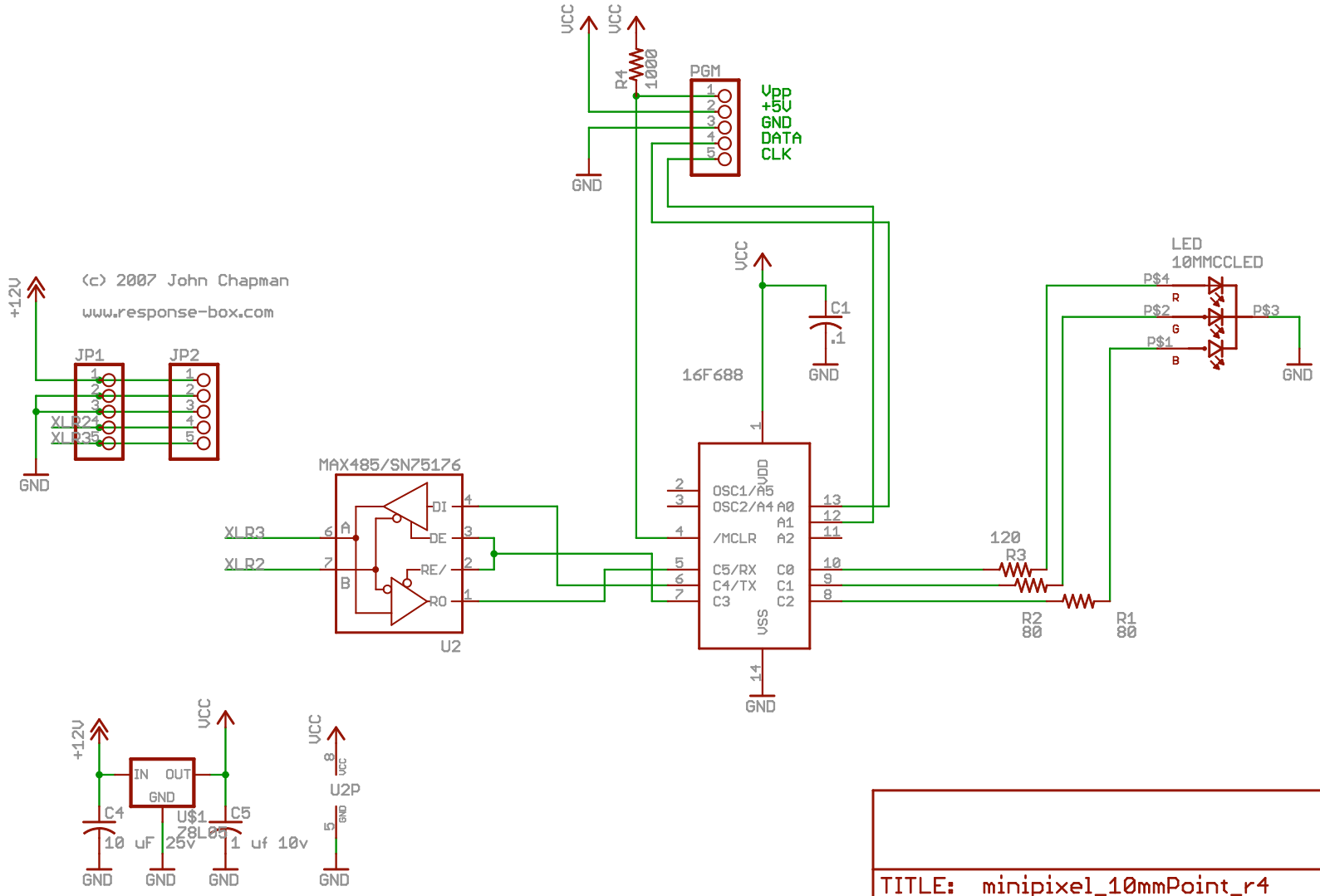

TITLE: minipixel_10mmPoint_r4

Document Number:

REV:

Date: 5/12/2008 11:35:12

Sheet: 1/1